SHARP | SUPERSTEAM+™ OVEN

SSC3088AS

Combination Steam and Convection Oven

THE ONLY OVEN THAT GRILLS PURELY WITH SUPERHEATED STEAM.

The SuperSteam+™ combination steam and convection oven creates meals that no other oven can by cooking in ways that no other oven does. Only the SuperSteam+ uses purely Superheated steam (up to 485°F) to grill, sauté and roast your favorite meats and vegetables. Cooking with Superheated Steam means that dishes come out crispy on the outside, tender, juicy and flavorful on the inside – with all the benefits of cooking with steam.

The stylish, built-in SuperSteam+ combination steam and convection oven is three ovens in one. You can cook with Superheated steam (up to 485°F) regular steam (212°F) and convection heating. A brilliant color LCD display with touch navigation makes SuperSteam+ easy to use. The oven's interface gives you expert guidance and built-in recipes to make the healthy and delicious meals you love.

With approximately 2 million steam ovens sold, it's easy to see why home cooks throughout the world trust Sharp.

FEATURES

DISPLAY
Full Color Touch Navigation

CONTROL
Touch Navigation 2.13" W x 3.75" H and 4 Mechanical Buttons on Door

COOKING SYSTEM
- Convection Damper System that controls airflow in upper, mid and lower zones
- Gentle Steam to Superheated Steam 90°F - 485°F
- Dry Convection 212°F - 450°F

COOKING MODES
- Steam Grill - Superheated Steam up to 485°F flowing from top
- Steam Roast - Heated Steam up to 485°F flowing from top, mid and lower back side
- Steam - Pure Steam flowing in all layers
- Gentle Steam - 90°F - 150°F controls oven temperature with steam for proofing, defrosting, and warming
- Convection Bake - Dry Convection Air flowing from top, mid and lower back side
- Convection Broil - Dry Convection Air flowing from top side
- Proofing, defrosting, and warming
- Dual Cook - Combination top steam grill and lower level steam

COOKING FEATURES
- Smart Cook - 58 Pre-set cook options using Convection Bake, Steam Grill, Steam Roast and Steam
- Steam Options - Steam Proof, Keep Warm, Simmer and Sauté
- Steam Defrost
- Manual Set - Steam Grill, Convection Broil, Steam Roast, Convection Bake, Steam and Steam Refresh

OVEN SETTINGS
Options - Control Lock, Sound On/Off, Demo Mode and Language/Temp

CLEANING
Options - Sterile Cleanse, Descale
Oven Cleaning - Steam and New Oven Clean

OVEN INTERIOR
- Non-Stick Finish
- Capacity: 1.1 Cubic Foot
- Two Level Cooking - Damper Convection System
- Two Baking/Steam Trays
- Split set of wire cooking racks for one tray

DIMENSIONS (inches/lbs) & WEIGHT

Cavity Dimensions (w x h x d)	15.55" x 12.01" x 9.45"
Product Dimensions with Trim Unit(w x h x d)	30" x 19.8" x 15.65"
Shipping Dimensions (w x h x d)	33.8" x 23.7" x 22.8"
Product Weight	65 lbs.
Shipping Weight	71 lbs.

ADDITIONAL SPECIFICATIONS

Power Source (Voltage, Hz) / Ratings	AC 120V, 60Hz, AC Only
Circuit Breaker	15A
Safety Compliance	UL Certified
Cord Length	57"
Door Clearance	13.5"

WARRANTY/UPC

Parts	1 Year Parts
Labor	1 Year Labor
UPC	0 74000 61980 7

© 2016 Sharp Electronics Corporation. All rights reserved.
Product specifications and design are subject to change without notice.

SHARP ELECTRONICS CORPORATION
Sharp Plaza, Mahwah, NJ 07495-1163
1.800.BE.SHARP • www.sharpusa.com

03-11-2016 Rx 15L-18

TECHNICAL DIAGRAMS

OVEN MEASUREMENTS

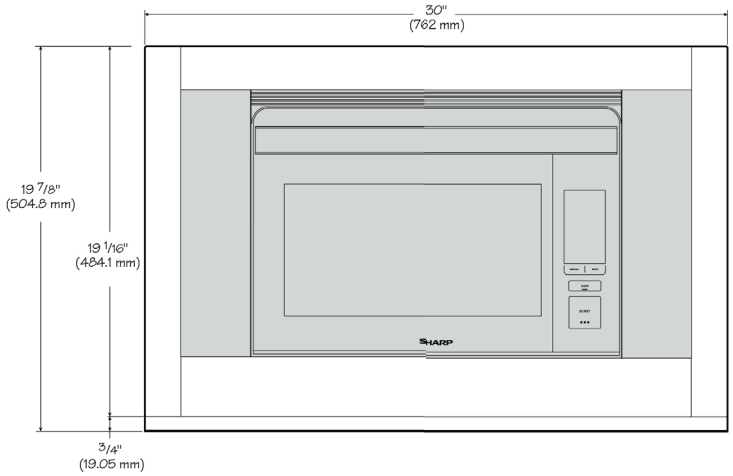

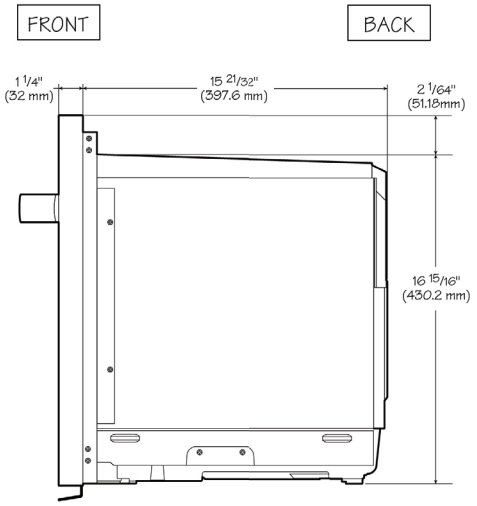

CLEARANCES AND DIMENSIONS FOR STANDARD SURFACE MOUNT

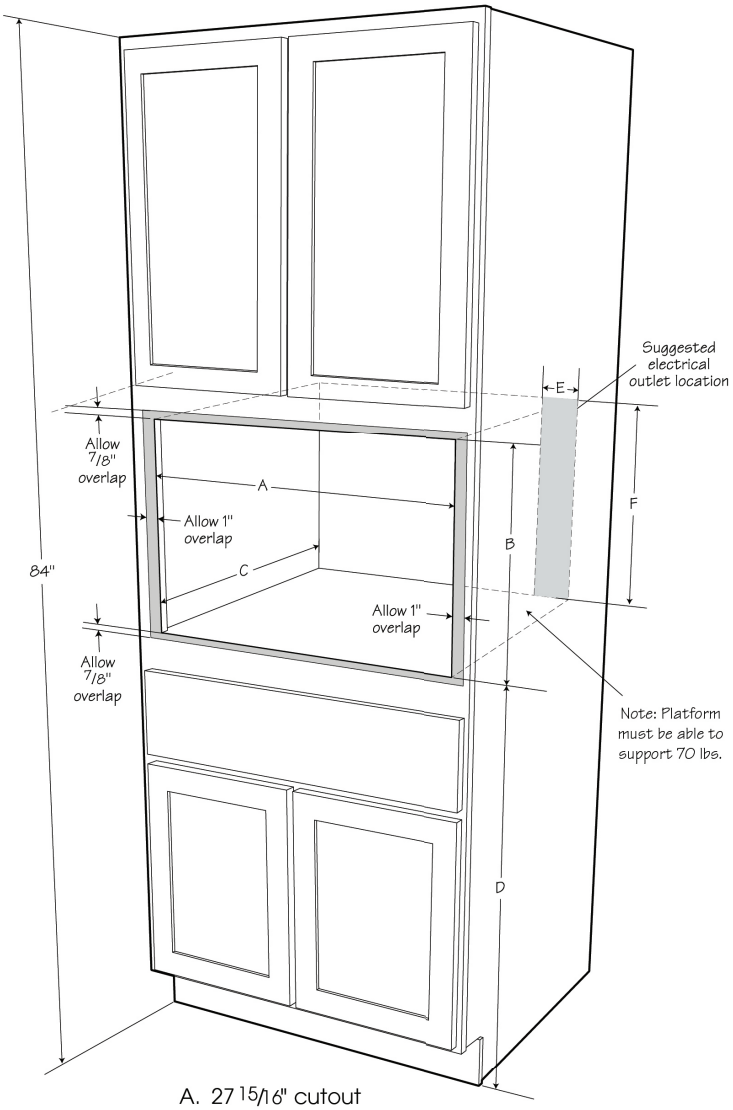

A. 27 15/16" cutout
B. 18 1/8" cutout*
C. 15 3/4" min. depth
D. 33" min. height
E. 4"
F. 18"

* Critical dimension

© 2016 Sharp Electronics Corporation. All rights reserved.
Product specifications and design are subject to change without notice.

SHARP ELECTRONICS CORPORATION
Sharp Plaza, Mahwah, NJ 07495-1163
1.800.BE.SHARP • www.sharpusa.com